Tagra | RF 2.4GHz | Battery Powered | LED Wall Plate | 1 Zone | 4 Scenes | Single Colour | White

BP1ZSC-W / ITM002619



Datasheet

23-10-2026

Tagra | RF 2.4GHz | Battery Powered | LED Wall Plate | 1 Zone | 4 Scenes | Single Colour | White



IP Rating	Voltage In	Warranty	Zones
IP20	3V	5 Years	1 Zones

SKU: BP1ZSC-W
ITM: ITM002619

Key Features:

- **Colour Control Type:** Single Colour
- **Control Distance:** 30m
- **Body Colour:** White
- **Dimensions (W x H x L):** 86 x 10 x 86mm

Mechanical Data			
Body Colour:	White	**Product Weight:**	133g
Dimensions (LxWxH):	86 x 86 x 10mm		

Electrical Data	
No. of Batteries:	1

Input Data			
Input Current:	0.08A	**Input Current Type:**	DC
Input Voltage:	3V		

Control Data			
Battery Type:	CR2032	**Colour Control Type:**	Single Colour
Control Distance (barrier-free):	30m	**No. of Scenes:**	4

Control Data

No. of Zones:	1

Environmental Data

Body Material:	PC	**Case Temperature Max. (tc):**	65°C
Ingress Protection (IP):	IP20	**Mounting Type:**	Surface Mounted
Operating Temperature:	-30°C - 55°C		

Dimension Drawing

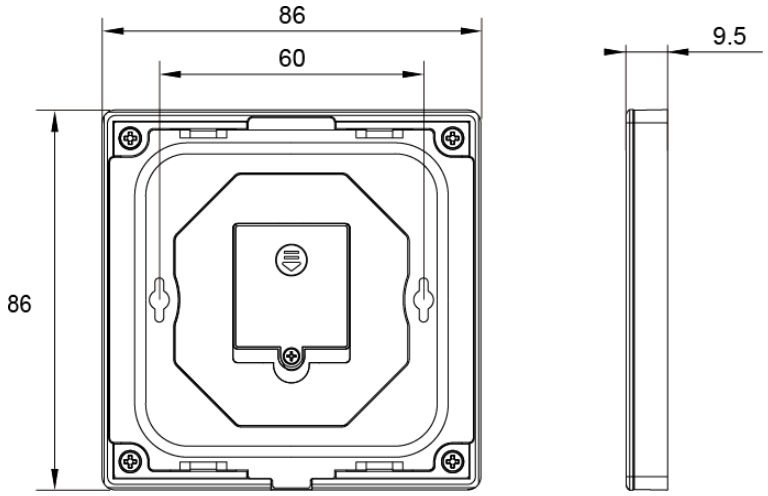

Packaging Data

Fixings Included:	Yes	**Packaging Height:**	6.5mm
Packaging Length:	100mm	**Packaging Width:**	92mm
Packaging Weight:	145g		

Disclaimer

Tagra Lighting have taken reasonable care to ensure that the information in this datasheet is accurate at time of publication however it should be noted that all specifications are subject to tolerance. Descriptive specifications such as colour are subjective. Tagra Lighting reserve the right to update specifications without notice. The information in the datasheet may only be relied on by customers of Tagra Lighting in accordance with applicable terms and conditions.

Tagra Lighting is a trading name of T.R Ventures Limited, a company incorporated in England with registered number 07757720. Our registered office is Unit 2, Southfield Industrial Estate, Trafford Park, M17 1SJ.

www.tagra-lighting.co.uk

support@tagra-lighting.co.uk